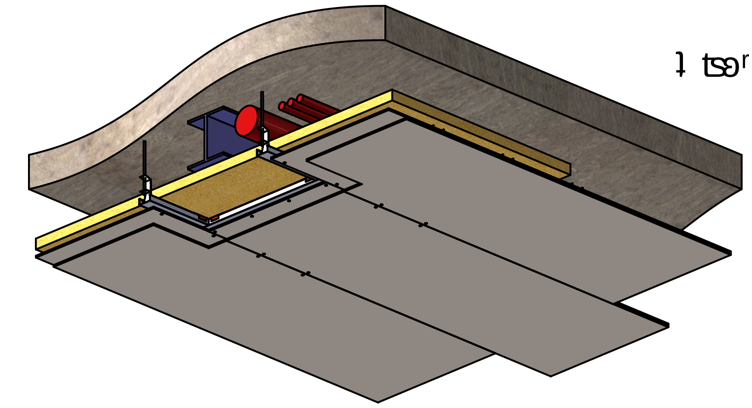

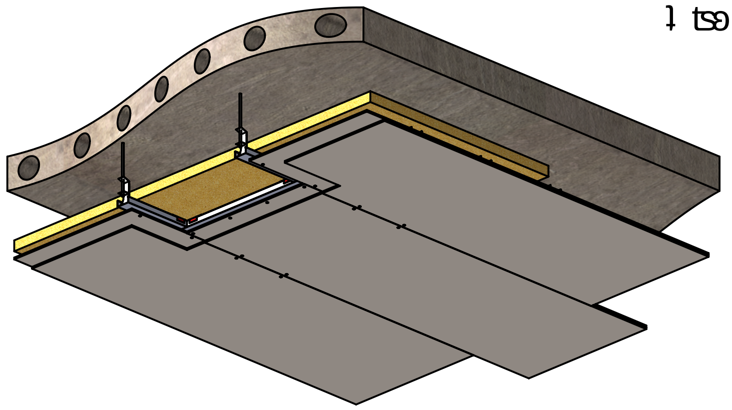

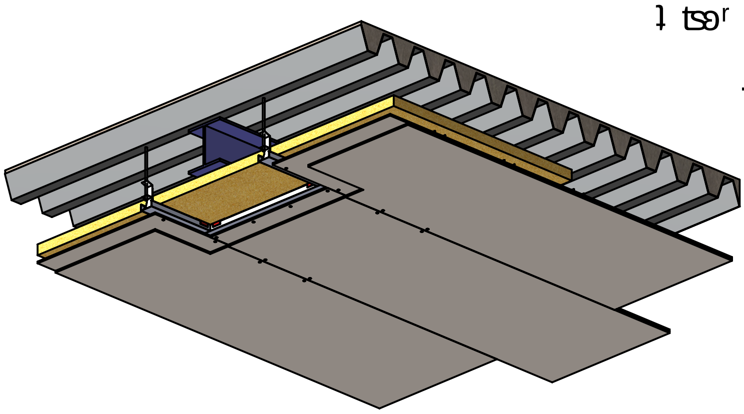

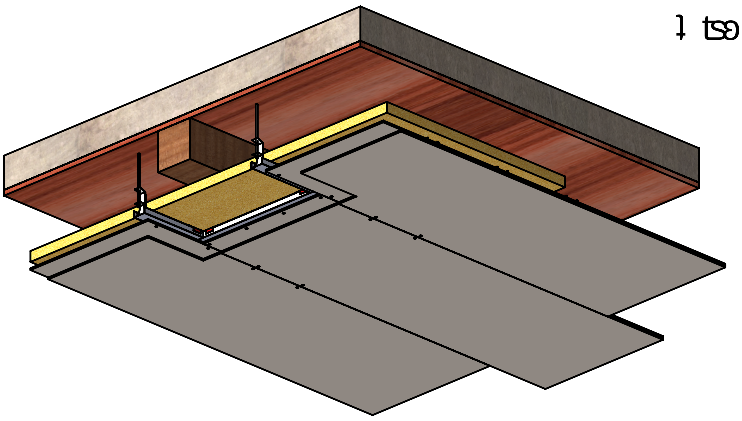

6719.59	1:50
1	1

SolidWorks
RUSSIA

REI 90

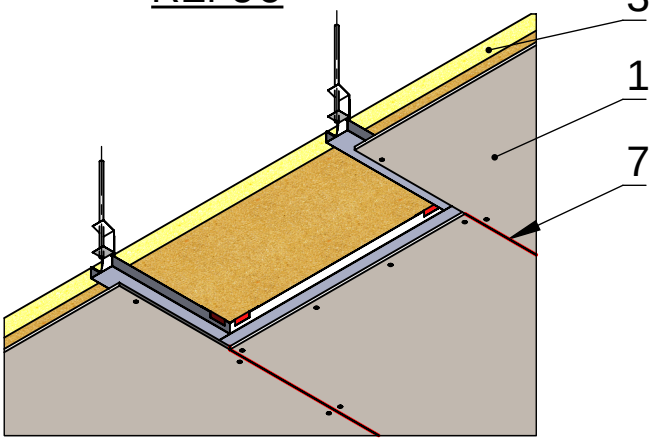

REI 150

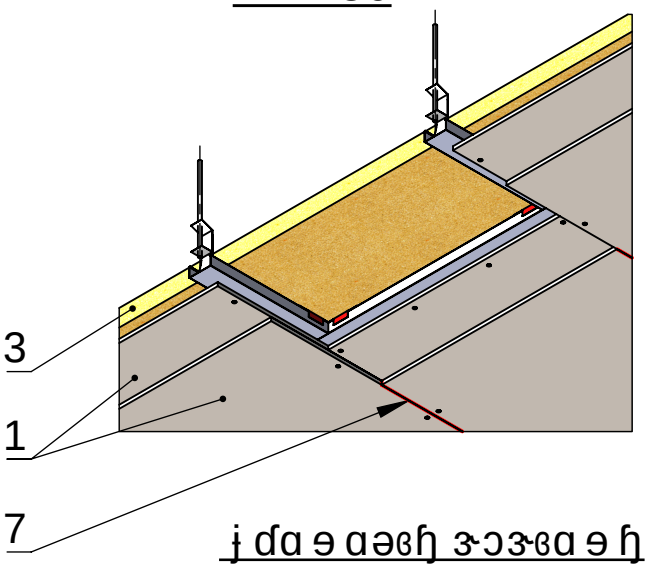

REI 180

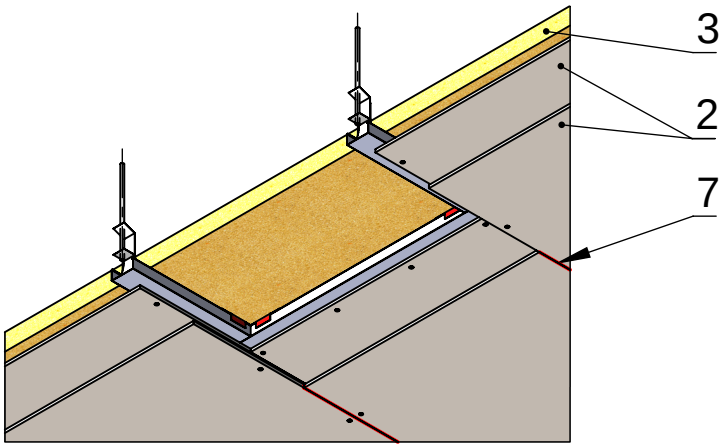

Ȼǝƀ.	ɸRɔ ɘ ɑǝǝƔRǝɔɑ
1	ǼƔǝɑƀR ɥ ɔɞǝRɬ ɛɗɔɞR FirePlat 8 ɘ ɘ
2	ǼƔǝɑƀR ɥ ɔɞǝRɬ ɛɗɔɞR FirePlat 10 ɘ ɘ
3	ȫRƀRɗɨɞǝƔRɬ ƔRɞR 50 ɘ ɘ
4	ŁɞRɗɨǝǝɕ ɛɜǝ ɠ ɔɗɨ ȻȻ60/27
5	Ȫǝɖɑɜǝɧɕ ɛǝɐƔɑɜ
6	Łǝɑɐɔǝɔɞɑɗɨ ɛɜǝ ɠ ɔɗɑɕ
7	ȯɑɜ ɘ ɑɞɔɖ TEHSTRONG CONTACT S

ƫRɜɖRɜ

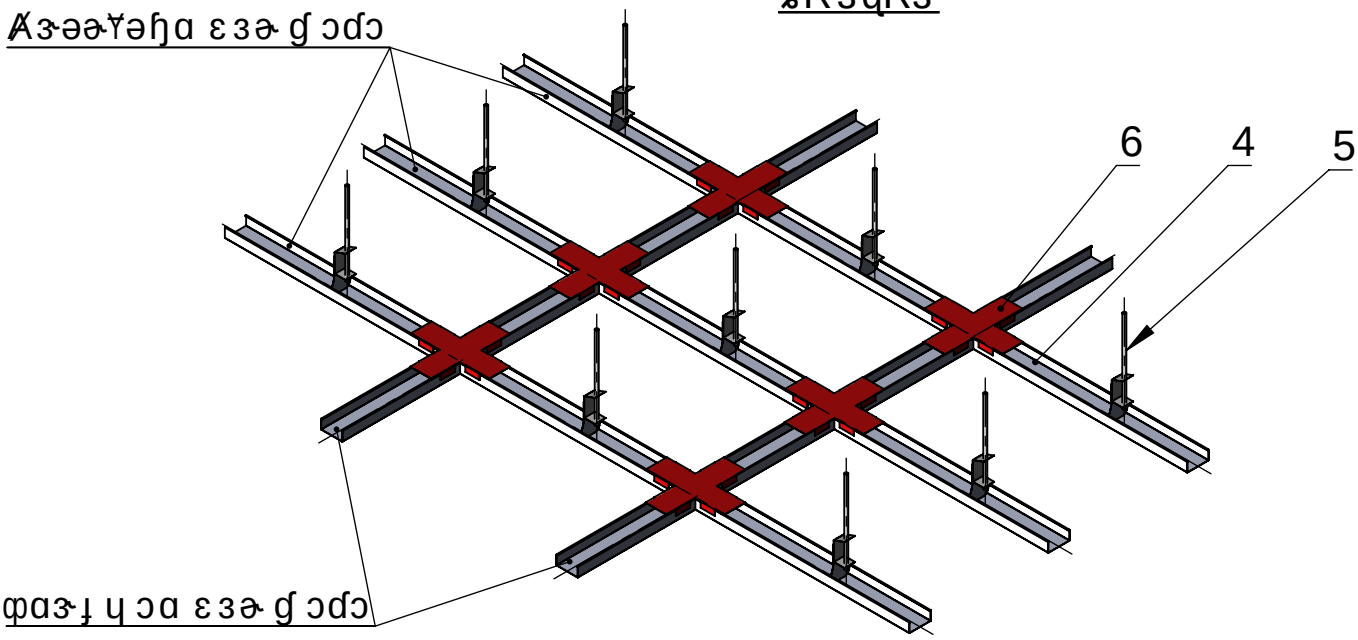

R Lɖ	ʃ ɖfɲs	¯ Hts Ɛlzɖ	ɬ tsHtʃ.	ʃ Ɔlsɔ	ʃ ɢɖʒ fɲsts? Ɛ Ɔ fɲstɕtsɖlsʃ dz dzɔ Ɛtsɖzfɲstɕz Ɛ ɥɖʷ Hɖʷ Lɔ ɖlsʳ tʃʃ tɕʃ Ɛtɕʳ lsɖ? ɖ ɘʳ ɢtstɕɔɥ ɖ ɘɔɔɖzʃʷ ɖ dzʃ ʃ dzʃ tɕdz Ɛ Ɛtsɖzɖzɖzʃ Ɛ ɔɥɖ?	ʃ ɖls	ʃ ɔfɲɲɔ	ʃ ɔfɲ lsɔɐ
ʈ ɔ.tɕɔɐ.	ʅ ʃ dzʃ dzʃ ɘ						
ɬ tɕtsɔ.							
ʊ. Ɛtsɖzɕtɕ						ʃ ɖfɲs 3	ʃ ɖfɲstsɔ 3
ʅ . Ɛtsɖzɕtɕ						ʃ ʃ ʃ "ʊ ʃ Ɛfɲstɕtsɖz"	
ʊ lsɔ.							

ʂ tstʃ ɖtɕtsɔ ɔdz

ʌ tstɕɖɔ lsɖ 4

Ȳ/õ ɛɗɔɞR
(ɛəɖRɒRəR ɟɜɗəϒəəɹ)

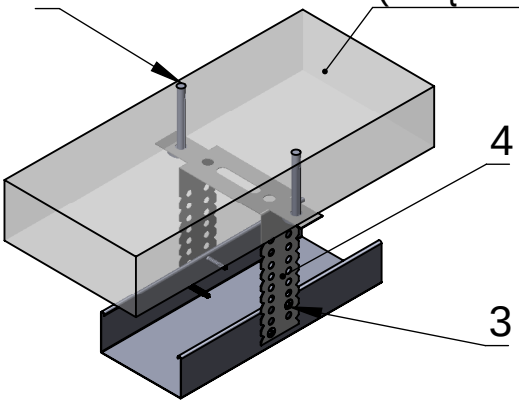

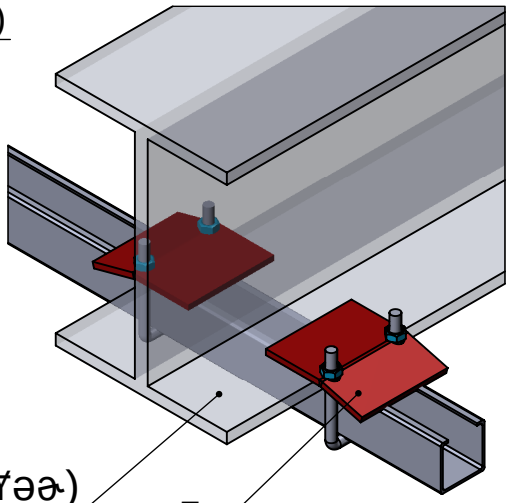

ÖϒɟɞRϒɜ
(ɛəɖRɒRə ɟɜɗəϒəəɹ)

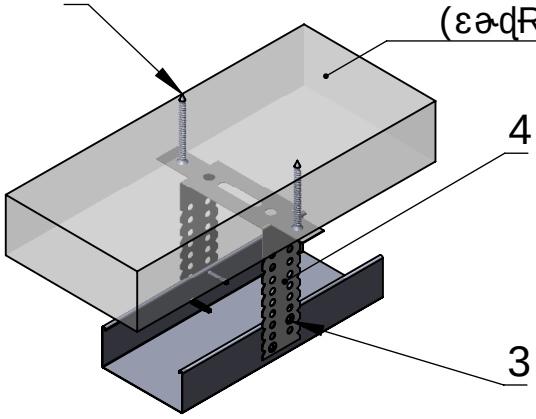

Ökɑɜɑϒɬəəəɹɑ ɛɑɜɑɖɜɧɞɔɔɑ
(ɛəɖRɒRəəɹ ɟɜɗəϒəəɹ)

Ȳ/õ ɛɗɔɞR
(ɛəɖRɒRəR ɟɜɗəϒəəɹ)

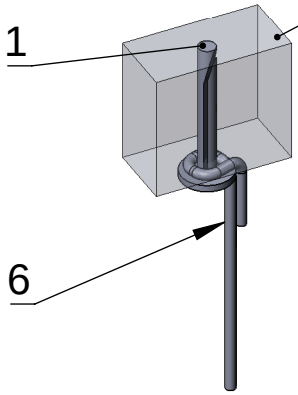

Ćɜəɹ ɠ əRɜɞɔɗ
(ɛəɖRɒRə ɟɜɗəϒəəɹ)

Ökɑɜɑϒɬəəəɹɑ ɛɑɜɑɖɜɧɞɔɔɑ
(ɛəɖRɒRəəɹ ɟɜɗəϒəəɹ)

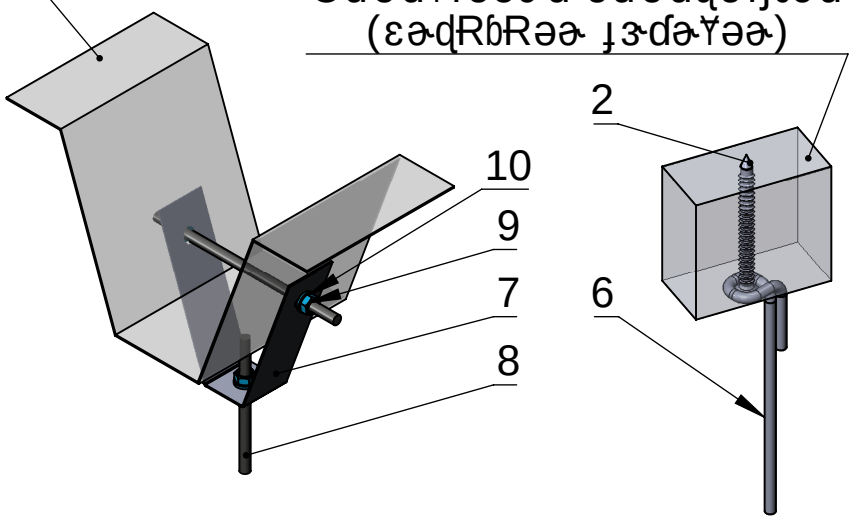

Ćəɓ.	ɸRɔ ɘ ɑəəəϒRəɔɑ
1	Õəɖɑɜ ɖɗɔɘ
2	ŁRɘəɜɑɓ
3	ŁRɘəɜɑɓ ɛə ɘɑɞRɗɗɟ
4	Ćɜɬəəɕ ɛəəϒɑɜ
5	ȳRɒɔɘəRɬɜɖəɾɾR
6	Ɽɬɣ R ɛəəϒɑɜR
7	ɬɜəəɤɞɑɛə ɒɗɬ ɛɜəɠəRɜɞɔɗR
8	Ʉ ɛɔɗɨɖR
9	ȯRɕɖR
10	ɄRɕɾR

ɟɗɑəɘɑəɞɧ ɖɜɑɛɗɑəɔɬ

					ɟ ɖfɾɧs	ɟ Ɔfɾɟɾ Ɔ	ɟ Ɔfɾʰ lsƆɞ
R Lɖʒ	ɟ ɖffɾɧs	¯ HtsϚlzɖʒ	ɬ tsHɬf.	ɾ Ɔlsɔ			
t Ɔ.tɞƆɞ.	ɿ ɟ ɖɖʒ ɖɖʒ ə						
ɬ tɖtsɔ.							
ʊ. Ϛtsɖɖstɕ.							
ɿ . Ϛtsɖɖstɕ.							
ʊlsɔ.					ɟ ɖfɾɧs 2	ɟ ɖffɾɧstsɔ 3	

ɟ ɕɖʒ fɾɧstsɾ?ϚƆʸ fɾɧstɛtsɖlsʒ ɖz ɖʑƆʸ
ϚtsɖʑfɾɧstɖzϚuɖʃʷ HɖZʸ LƆʲ ɖlsʳ tʃ j tɖʒ Ϛtɕʳ lsɖʔ
ɖʃ ɔʳ ɕtstɛƆɿ ɖʃɔƆɖʑʃʷ ɖʃɖzɿ j ɖʒ tɖɖz ⊐
ϚtsɖʒɖʒzɖʑʃϚuɖʔ

ɟ ɖffɾɧs ɟ ɖffɾɧstsɔ

ɟ ɖ"ʊ j ⊐fɾɧstɖtsɖɖʒ"

ϚtsɖɖʒƆlsϕ4